Black Opal Xtreme Air mini 6 Airborne Special Flat Panel Display System

TABLE OF CONTENTS

Chapter	Page
1 DESCRIPTION	**1-1**
2 SPECIFICATIONS	**2-1**
2.1 System Performance	2-1
2.2 Controls	2-4
2.3 Communications	2-4
2.4 Physical Characteristics	2-5
2.5 Electrical Requirements	2-5
2.6 Environmental	2-5
2.7 Connector/Pin Details	2-6
3 SET-UP	**3-1**
3.1 Mounts	3-1
3.2 Connections	3-1
3.3 Set-up Procedure	3-2
3.4 Heating and Cooling	3-3
4 OUTLINE DRAWING	**4-1**
LIST OF FIGURES	
Figure 3-1: Mounts	3-1
Figure 3-2: Connections	3-2
Figure 4-1: Outline Drawing	4-1

Copyright. All Rights Reserved. Laserdyne Pty Ltd

1 DESCRIPTION

Laserdyne's Black Opal displays have been engineered for a wide range of land-, sea- or air-borne display applications including remote/indirect viewing of video images generated by day, night or thermal cameras.

The Xtreme Air mini 6 model is a 6.5" [with XGA (1,024 x 768) resolution] version of the Black Opal display type, specially designed for airborne use, and made compact to fit space-limited installations.

This is a reduced weight/reduced cost model, where some of the stringent sealing and other measures required for land and seaborne operations have been relaxed. It retains the advanced video features and generally high level of ruggedisation for which Black Opal displays are renowned.

This model is fitted with a high brightness LED backlight module. LED backlighting improves reliability when compared with standard CCFL (lamp) backlights – not only by substituting solid-state components for fragile lamps, but also by the graceful nature of LED backlight degradation as the unit ages – a missing lamp may make an LCD unreadable, but a few fading LEDs make little difference.

Each Xtreme Air model consists of a LED backlit LCD, a low reflection high clarity window, a microprocessor unit, and power & control electronics. All items are housed within a rugged enclosure containing heating and cooling mechanisms. The LCD is protected by a tough, antireflection-coated window which also provides EMI/EMC shielding. The window is matched to the LCD glass with index-matched materials to minimise internal reflections, eliminating potential internal window fogging and maximising window strength. All models are button operated.

Each model features MultiVision, allowing for multiple analogue and SDI video inputs (for SD, HD and other analogue video formats, and PC RGB inputs), and providing simultaneous display of up to 6 inputs.

Images are displayed on a LED backlit LCD that may be viewed in full direct sunlight down to full darkness and feature backlight settings suitable for low light viewing, for viewing with Night Vision Devices and completely off for black-out conditions.

Black Opal displays have several features designed to increase the effectiveness of surveillance, sighting and security systems, including:

- Image Enhancement: video inputs are compensated for obscuration (e.g. rain, fog, snow, mist or smoke) within an adjustable central window where contrast and colour are enhanced. For a chosen window size, the enhancement is applied to that portion of the displayed image;
- Digital Zoom: a fully X & Y interpolated "smart" zoom, not merely pixel multiplying, yields a clear zoomed image without the blocky "pixelated" appearance often seen with digital zooming; and
- Freeze Frame: freezes the current prime video channel while leaving live any video inset.
- Colourisation: applies preloaded colour palettes to monochrome imagery.
- Motion ("edge tearing") compensation: minimises the jagged edges that can occur with motion in video on LCDs.

These displays also provide overlay (chroma keying) capability.

Black Opal display software is easily upgradeable, upgrades can be downloaded in the field via a PC.

Copyright. All Rights Reserved. Laserdyne Pty Ltd

2 SYSTEM SPECIFICATIONS

Notation - use of brackets in tables: [*notes & qualifications*] (*units*) {*alternate units*}.

2.1 System Performance

PARAMETER		SPECIFICATION
Designation		
Xtreme Air mini 6		Black Opal airborne special - helicopter-dedicated design, 6”, compact, high brightness, XGA resolution
Control		
Control Functions [factory configurable to customer requirements]		On/Off; backlight intensity; menu select; select screen lay-out; select image enhancement feature; digital zoom; freeze frame; night day toggle
Controls		7 tactile LED-backlit [green] buttons
Display		
Type		Active Matrix Colour [24-bit colour] LED backlit LCD Module
Display Size (″ {cm})	**diagonal**	6.5 {16.51}
	active area	5.2 {13.2} x 3.9” {9.9}
Aspect Ratio [width:height]		4:3
Pixel Number [1 pixel is RGB trio]		1,024 x 768
Colour		16 Million [8-bit each colour]
Grey Scale		256 [8-bit]
Backlight Luminance [LED type;	**minimum**	0
approx.; adjustable] (cdm^{-2}) [1]	**maximum**	≈ 1,000 [800 typical]
Contrast Ratio [limiting; LCD]		600:1
Response Time [typical] (ms)		25 [T_r =6; T_f = 19]
Readability [ambient conditions]		black-out to full direct sunlight [10^5 lux]
Night Vision Device compatible?		yes [low intensity green]
Viewing Angle	**vertical**	±80
[full angle] (°)	**horizontal**	+80/-60

[1] 1 cdm^{-2} = 1 nit.

Copyright. All Rights Reserved. Laserdyne Pty Ltd

PARAMETER		SPECIFICATION
Inputs		
Physical Connections	**Low resolution group**	4 simultaneous channels, each channel being either 1 x Y/C or 2 x CVBS
	High Resolution group	1 simultaneous channel, selectable from 6 general purpose analogue inputs. Connections supported are 6 x CVBS, or 3 x Y/C, or 2 x YPrPb, or 2 x RGsB, or 2 x RGBHV.
	SDI group	1 simultaneous channel, selectable from 2 inputs
Signal Formats supported	**Low resolution group**	Standard definition (SD) only: (PAL/NTSC/SECAM/CCIR-601/RS170; interlaced and non-interlaced)
	High Resolution group	SD using CVBS or Y/C: (PAL/NTSC/SECAM/CCIR-601/RS170; interlaced and non-interlaced) HD using YPrPb or RGB: (720p, 1080i, 1080p); PC RGB input: VESA RGB analogue (UXGA maximum resolution) Other analogue video standards supported on request (i.e. STANAG 3350)
	SDI group	SMPTE 259M, SMPTE 292M (SMPTE 424M optional)
Connection Formats	**Low resolution group**	CVBS, Y/C. All analogue inputs are 75ohm terminated
	High resolution group	CVBS, Y/C, YPrPb, RGBHV, RGsB. All analogue inputs are 75ohm terminated.
	SDI group	SD-SDI, HD-SDI (3G-SDI optional). BNC, 75 ohm.
Outputs		
Physical Connections	**Analogue output group**	1 output channel, available from 3 general purpose analogue outputs. Connections supported are SD: (CVBS and Y/C simultaneous) or RGB or YPrPb; or HD: YPrPb or RGB or PC: RGBHV/RGsB [XGA maximum resolution] All analogue outputs are 75ohm
	SDI output group	2 x BNC, 75ohm

Copyright. All Rights Reserved. Laserdyne Pty Ltd

PARAMETER		SPECIFICATION
Signal Formats supported	**Analogue output group**	SD: PAL/NTSC/SECAM/CCIR-601/RS170 HD: SMPTE 274M 1080p30, 1080i60, 720p60 (maximum resolution) PC: VESA (XGA maximum resolution)
	SDI group	SMPTE 259M, SMPTE 292M (SMPTE 424M optional)
Connection Formats	**Analogue output group**	CVBS, Y/C, YPrPb, RGBHV, RGsB
	SDI group	Output 1: Re-clocked copy of the selected SDI input channel (same format as the input) Output 2: Configurable to be either (a) any other video input (same format); or (b) A specified format
Functionality	**Analogue output group**	Configurable to be either (a) pass through any other video input (with a compliant format); or (b) a specified format and image configuration using any of the available inputs (limits apply)
	SDI group	Output 1: Re-clocked copy of the selected SDI input channel (same format as the input) Output 2: Configurable to be either (a) pass through any other video input (with a compliant format); or (b) a specified format and image configuration using any of the available inputs (limits apply)
Safety & Protection		
Cooling		thermal transfer by internal and external convection
Display Window		Antireflection, hard-coated, sealed, EMI/EMC shielded; index-matched to LCD glass
Electrical Protection		conforms to: QSTAG 307; MIL-STD-704A; RTCA/DO-160D, Category Z, power input 18 to 30.3Vdc [min. max. & emergency operation, interrupts, abnormal surge (48Vdc for 1s), engine starting undervoltage]; RTCA/DO-160D, Category A, voltage spike [600Vdc for 10μs]

Copyright. All Rights Reserved. Laserdyne Pty Ltd

PARAMETER		SPECIFICATION
Audible Emission [@ ≥ 10m]		nil
Support		
MTBF [@30°C; 100% duty cycle] (hours)	**Ground Mobile [wheeled]**	> 14,700
	Airborne Rotary Winged	> 6,500
Operational Life (years)		10

2.2 Controls

Control Type	Location		Label		Function	
			Primary	Secondary	Primary	Secondary
Button	bottom of front face	left		⏻	menu	toggle between active and standby
Button		2nd left	○	☼|☾	show assigned screen lay-outs for selection	toggle between Day and Night backlight modes
Button		3rd left			enhance	
Button		middle			zoom	
Button		3rd right			freeze	
Button		2nd right	▽		backlight down; scroll/adjust down	
Button		right	△		backlight up; scroll/adjust up	

2.3 Communications

PARAMETER		SPECIFICATION
Ports		three Serial ports (maximum)
Data	**Format**	2 x RS-232, 1 x RS-422 (other configurations available on request – maximum capacity is 2 x RS422 or 4 x RS232)
	Rate (Baud)	115200,n,8,1 standard, others available on request

Copyright. All Rights Reserved. Laserdyne Pty Ltd

2.4 Physical Characteristics

PARAMETER			SPECIFICATION
Mass [approx.] (kg)			1.4
Dimensions (mm)	**Width**	**body**	160
		overall [2]	170
	Height	**body**	135
		overall [2]	145
	Depth [3]	**body**	56.15
		overall [2]	80.9
Mounting		**Panel Mount**	4 x 4.4mm diameter holes in corners
		Side Mount	4 x M4 tapped holes, 6mm deep, on each side
		Rear Mount	VESA 75 type, 4 x M4 tapped holes, 8mm deep

2.5 Electrical Characteristics

PARAMETER		SPECIFICATION
Supply Voltage (Vdc) [MIL-STD-704C]		18 to 33 [28 nominal]
Current Drain [@ 28Vdc; typical] (A)	**heater on**	< 2.5
	heater off	< 1.5

2.6 Environmental

PARAMETER				SPECIFICATION
Temperature (°C) [RTCA/DO-160D, class A1]	**Operate** [4]	**min.** [5]		-25
		max. [6]	**long term**	+55
			short term	+70
	Survive		**min.** [5]	-40
			max. [6]	+85
Vibration [RTCA/DO-160D, Helicopter Category R]				sine on random
Shock [; RTCA/DO-160D, Helicopter Categories B & C, drop shock]		**operational**		6g, 11ms; 3 shocks in each orientation
		crash safety		20g, 11ms; 3 shocks in each orientation

[2] Including mounting flange.
[3] Excluding connectors.
[4] When used in accordance with procedures in User's Manual.
[5] Without wind-chill.
[6] Without solar radiation.

Copyright. All Rights Reserved. Laserdyne Pty Ltd

PARAMETER	SPECIFICATION
Sealing [RTCA/DO-160D, Category W] [7]	water resistant [drip proof]
Altitude/Low Pressure [operational; RTCA/DO-160D, class A1]	15,000 feet
EMI/EMC [7, 8]	MIL-STD-461D

2.7 Connector/Pin Details

No.	Name	Pin Marking	Purpose	Notes for Harness
J1: Power & Comms Connection: Connector, MilSpec, 38999/24WB35PN, 11-35, Panel, Plug, 'click' screw-on, 13 Way				
J1-1	DC+	1	Power input, +28V nominal	3A maximum current
J1-2	0V	2	Power return	3A maximum current
J1-3	GND1	3	Communication channel 1 GND	Common for TX/RX for comm. channel 1;
J1-4	TX1/TX1-	4	RS232 TX1, or RS422 TX1-	Dual purpose comm. channel 1
J1-5	TX1+	5	RS422 TX1+	Used if RS422 interface is selected for comm. channel 1
J1-6	RX1/RX1-	6	RS232 RX1, or RS422 RX1-	Dual purpose, comm. Channel 1
J1-7	RX1+	7	RS422 RX1+	Used if RS422 interface is selected for comm. Channel 1
J1-8	TX2/TX2-	8	RS232 TX2, or RS422 TX2-	Dual purpose comm. Channel 2
J1-9	RX2/RX2-	9	RS232 RX2, or RS422 RX2-	Dual purpose, comm. Channel 2
J1-10	GND2	10	Communication channel 2 GND	Common for TX/RX for comm. Channel 2;
J1-11	GND3	11	Communication channel 3 GND	Common for TX/RX for comm. Channel 3;

[7] With compliant line connectors attached.
[8] Refer to manufacturer for details.

Copyright. All Rights Reserved. Laserdyne Pty Ltd

No.	Name	Pin Marking	Purpose	Notes for Harness
J1: Power & Comms Connection (cont'd)				
J1-12	TX3/TX2+	12	RS232 TX3, or RS422 TX2+	Dual purpose comm. Channel 2/3. RS422 (on comm. Channel 2) and RS232 (comm. channel 3) are mutually exclusive as they share common pins.
J1-13	RX3/RX2+	13	RS232 RX3, or RX422 RX2+	Dual purpose comm. Channel 2/3. RS422 (on comm. Channel 2) and RS232 (comm. channel 3) are mutually exclusive as they share common pins.
J2: SD Video In/Out Connection: Connector, MilSpec, 38999/24WC35SN, 13-35, Panel, Socket, 'click' screw-on, 22 Way				
J2-1	Y1/CVBS1	1	Video channel 1 luma/composite signal	75 ohm terminated
J2-2	C1/CVBS5	2	Video channel 1 chroma signal/second composite signal for channel 1	75 ohm terminated
J2-3	Y2/CVBS2	3	Video channel 2 luma/composite signal	75 ohm terminated
J2-4	C2/CVBS6	4	Video channel 2 chroma signal/second composite signal for channel 2	75 ohm terminated
J2-5	Y3/CVBS3	5	Video channel 3 luma/composite signal	75 ohm terminated
J2-6	C3/CVBS7	6	Video channel 3 chroma signal/second composite signal for channel 3	75 ohm terminated
J2-7	Y4/CVBS4	7	Video channel 4 luma/composite signal	75 ohm terminated
J2-8	C4/CVBS8	8	Video channel 4 chroma signal/second composite signal for channel 4	75 ohm terminated
J2-9	Out1	9	CVBS output (SD), or Y/G output (HD/PC)	Video output, 75 ohm impedance.
J2-10	GND_Out1	10	Video output 1 GND	Return for Out1
J2-11	Out2	11	Luma output (S-VIDEO), or Pb/B output (HD/PC)	Video output, 75 ohm impedance.

Copyright. All Rights Reserved. Laserdyne Pty Ltd

No.	Name	Pin Marking	Purpose	Notes for Harness
J2: SD Video In/Out Connection (cont'd)				
J2-12	GND_Out2	12	Video output 2 GND	Return for Out2
J2-13	Out3	13	Chroma output (S-Video), or Pr/R output (HD/PC)	Video output, 75 ohm impedance.
J2-14	GND_Out3	14	Video output 3 GND	Return for Out3
J2-15	GND1	15	Video channel 1 GND	Common for Y1 and C1
J2-16	GND2	16	Video channel 2 GND	Common for Y2 and C2
J2-17	GND3	17	Video channel 3 GND	Common for Y3 and C3
J2-18	GND4	18	Video channel 4 GND	Common for Y4 and C4
J2-19	HS_Out	19	Horizontal sync output	Synchronisation signal if sync-on-green or sync-on-Y is not used.
J2-20	VS_Out	20	Vertical sync output	Synchronisation signal if sync-on-green or sync-on-Y is not used.
J2-21	Sync_GND	21	HS,VS Ground	Common for HS and VS signals
J2-22	Dimming	22	Analog Input, used to externally control the backlight (if enabled)	0 to 32V range, maximum detected input is 60V.
J3: HD Video Connection: Connector, MilSpec, 38999/24WC35PN, 13-35, Panel, Plug, 'click' screw-on, 22 Way				
J3-1	GREENA1	1	Analog video input: GreenA1 / YA1 / YA1/ CVBSA1 input	75 ohm terminated. Use as Green for PC input (with pins 3 and 5). Also can be used as Y for component (with pins 3 and 5 for Pr, Pb), Y for s-video (with pin 7 for chroma), or as a CVBS input
J3-2	GREENA1_GND	2	GND return for pin 1	
J3-3	BLUEA1	3	Analog video input: BlueA1 / PbA1 / YA2/ CVBSA2 input	75 ohm terminated. Use as Blue for PC input (with pins 1 and 5). Also can be used as Pb for component (with pins 1 and 5 for Y, Pr), Y for s-video (with pin 9 for chroma), or as a CVBS input
J3-4	BLUEA1_GND	4	GND return for pin 3	

Copyright. All Rights Reserved. Laserdyne Pty Ltd

No.	Name	Pin Marking	Purpose	Notes for Harness
J3: HD Video Connection (cont'd)				
J3-5	REDA1	5	Analog video input: RedA1 / PrA1 / YA3/ CVBSA3 input	75 ohm terminated. Use as Red for PC input (with pins 1 and 3). Also can be used as Pr for component (with pins 1 and 3 for Y, Pb), Y for s-video (with pin 11 for chroma), or as a CVBS input
J3-6	REDA1_GND	6	GND return for pin 5	
J3-7	REDA2	7	Analog video input: RedA2 / PrA2 / CA1/ CVBSA4 input	75 ohm terminated. Use as Pr for HD input (with pins 9 and 11). Also can be used as Red (with pins 9 and 11), C for s-video (with pin 1 for luma), or as a CVBS input
J3-8	REDA2_GND	8	GND return for pin 7	
J3-9	BLUEA2	9	Analog video input: BlueA2 / PrA2 / CA2/ CVBSA5 input	75 ohm terminated. Use as Pb for HD input (with pins 7 and 11). Also can be used as Blue (with pins 7 and 11), C for s-video (with pin 3 for luma), or as a CVBS input
J3-10	BLUEA2_GND	10	GND return for pin 9	
J3-11	GREENA2	11	Analog video input: GreenA2 / YA2/ CA3/ CVBSA6 input	75 ohm terminated. Use as Y for HD input (with pins 7 and 9). Also can be used as Green (with pins 7 and 9), C for s-video (with pin 5 for luma), or as a CVBS input
J3-12	GREENA2_GND	12	GND return for pin 11	
J3-13	DDC_SCL	13	DDC channel clock (RGB1)	Optional
J3-14	DDC_SDA	14	DDC channel data (RGB1)	Optional
J3-15	HSA1	15	Horizontal Sync, for RGB A1	TTL level
J3-16	VSA1	16	Vertical Sync, for RGB A1	TTL level
J3-17	GNDA1	17	GND for HSA1, VSA1	
J3-18	HSA2	18	Horizontal Sync, for RGB A2	TTL level
J3-19	VSA2	19	Vertical Sync, for RGB A2	TTL level

Copyright. All Rights Reserved. Laserdyne Pty Ltd

No.	Name	Pin Marking	Purpose	Notes for Harness
J3: HD Video Connection (cont'd)				
J3-20	GNDA2	20	GND for HSA2, VSA2	
J3-21	DDC_+5V	21	DDC channel +5V	Optional
J3-22	DDC_GND	22	DDC channel GND	Optional
J4: Earth Point Connection: M5 threaded stud				
J5: Misc. Connection: Connector, MilSpec, 38999/24WC35PA, 13-35, Panel, Plug, 'click' screw-on, 22 Way				
J5-1	TX+	1	Ethernet TX+ pin 1	Fully protected against transients.
J5-2	TX-	2	Ethernet TX- pin 2	Fully protected against transients.
J5-3	RX+	3	Ethernet RX+ pin 3	Fully protected against transients.
J5-4	RX-	4	Ethernet RX- pin 6	Fully protected against transients.
J5-5	SHIELD	5	Shield for Ethernet (chassis)	tied to chassis
J5-6	USB_+5V	6	USB Pin 1	factory configured, ESD protection only
J5-7	USB_-DATA	7	USB Pin 2	factory configured, ESD protection only
J5-8	USB_+DATA	8	USB Pin 3	factory configured, ESD protection only
J5-9	USB_GND	9	USB Pin 4	factory configured, ESD protection only
J5-10	Audio_L_in	10	Audio input, Left	Fully protected against transients.
J5-11	Audio_R_in	11	Audio input, Right	Fully protected against transients.
J5-12	Audio_L_out	12	Audio output, Left	Fully protected against transients.
J5-13	Audio_R_out	13	Audio output, Right	Fully protected against transients.
J5-14	Audio GND.	14	Common for audio	tied to chassis
J5-15	PS2_DATA	15	PS2 pin 1, or USBOTG D+	factory configured, ESD protection only
J5-16	PS2_GND	16	PS2 pin 3, or USBOTG GND	factory configured, ESD protection only
J5-17	PS2_VCC	17	PS2 pin 4, or USBOTG VBUS	factory configured, ESD protection only
J5-18	PS2_CLK	18	PS2 pin 5, or USBOTG D-	factory configured, ESD protection only
J5-19	Audio_GND_IN	19		tied to chassis
J5-20	Audio_GND_OUT	20		tied to chassis

Copyright. All Rights Reserved. Laserdyne Pty Ltd

No.	Name	Pin Marking	Purpose	Notes for Harness
J5: Misc. Connection (cont'd)				
J5-21	spare1	21	unused, or Ethernet LED+ for SPD LED, or USBOTG ID	factory configured, ESD protection only
J5-22	spare2	22	unused, or Ethernet LED+ for LINK LED.	factory configured, ESD protection only
J6: SDI Input #1 Connection: Connector, BNC				
	SDI In1		SDI input #1 for SD-SDI, HD-SDI (3G-SDI optional)	75 ohm BNC. Cable must comply with loss requirements of SMPTE 292M.
J7: SDI Input #2 Connection: Connector, BNC				
	SDI In2		SDI input #2 for SD-SDI, HD-SDI (3G-SDI optional)	75 ohm BNC. Cable must comply with loss requirements of SMPTE 292M.
J8: SDI Output #1 Connection: Connector, BNC				
	SDI Out1		Selected SDI input e-clocked Output	75 ohm BNC. Cable must comply with loss requirements of SMPTE 292M.
J9: SDI Output #2 Connection: Connector, BNC				
	SDI Out2		Generated SDI output (SD-SDI, HD-SDI (3G-SDI optional)	75 ohm BNC. Cable must comply with loss requirements of SMPTE 292M.

Copyright. All Rights Reserved. Laserdyne Pty Ltd

3 SET-UP

3.1 Mounts

The unit has three mounting methods:

1. Panel Mount: one 4.4mm diameter hole in each corner of the front bezel.
2. Side Mount: four M4 tapped holes, 6mm deep, on each side of the rear section.
3. Rear Mount: VESA 75 type, four M4 tapped holes, 8mm deep, on the rear face of the unit.

.

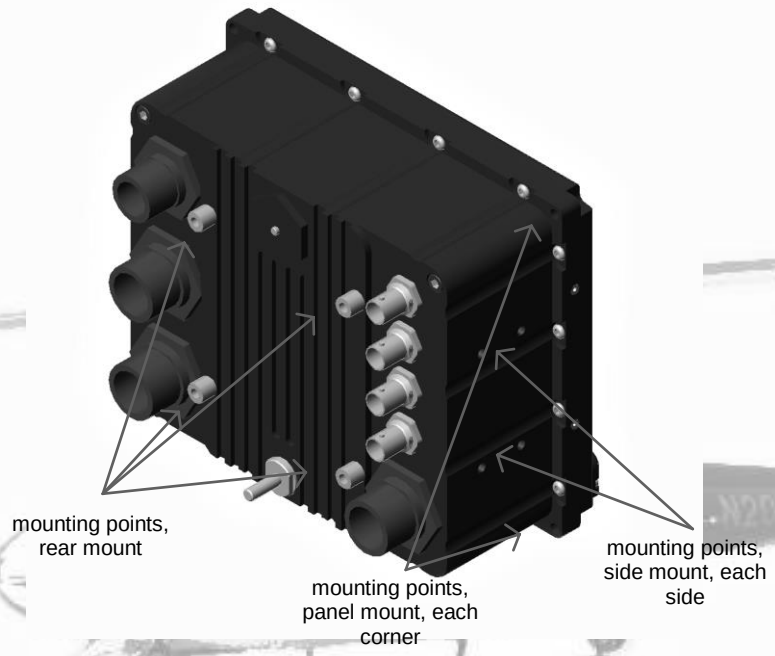

Figure 3-1: Mounts

3.2 Connections

The unit has nine connection points located on the rear:

Connector J1, the Power & Comms connection;

Connector J2, the SD Video In/Out connection;

Connector J3, the HD Video connection;

Connector J4, the Earth Point connection;

Copyright. All Rights Reserved. Laserdyne Pty Ltd

Connector J5, the Miscellaneous connection;

Connector J6, the SDI Input #1 connection;

Connector J7, the SDI Input #2 connection;

Connector J8, the SDI Output #1 connection; and

Connector J9, the SDI Output #2 connection.

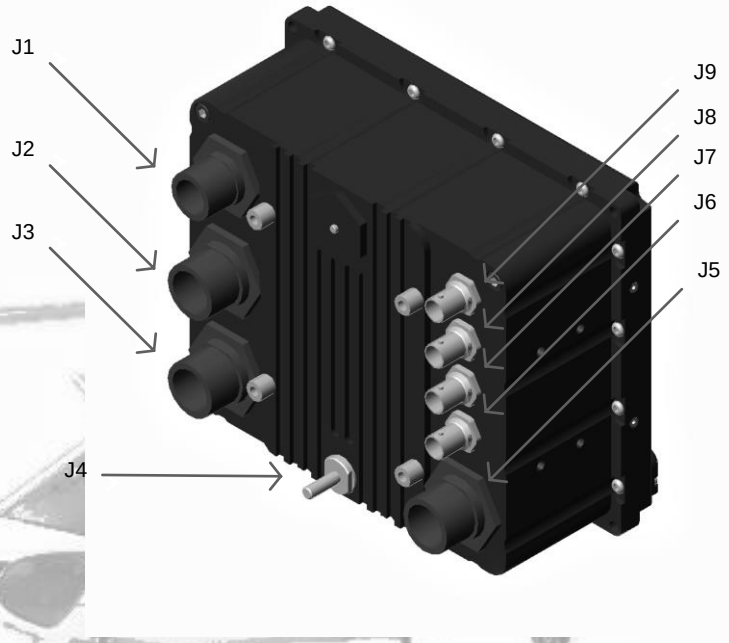

Figure 3-2: Connections

3.3 Set-up Procedure

CAUTION: **User-supplied cables must be correctly wired (see list of Connector/Pin Details).**

Ensure that external power is within the range specified herein.

Ensure that external power is OFF before proceeding with set-up.

Copyright. All Rights Reserved. Laserdyne Pty Ltd

- Mount the unit to the vehicle or platform, using one of the mounting methods provided.
- Connect the earth point on the unit to an appropriate point on the vehicle.
- Connect the required cables for video in/out to the unit and to the external imaging system(s).
- Connect the required power/data cable to the unit and to the external power source, and to the communication data source.

3.4 Heating and Cooling

The unit contains internal heating and cooling mechanisms that are triggered at certain internal temperatures.

The approximate warm-up rate is 17s/°C (e.g. with starting internal temperature of -40°C, unit will power up in about 11 minutes; with starting internal temperature of -25°C, unit will power up in about 7 minutes).

Once the unit has warmed it will operate normally provided that the ambient temperature stays within the specified operating temperature range.

The operating procedures, internal temperatures and resulting operating conditions are shown in the following table.

Ambient Temp. (°C)	Procedure	Internal Temp. (°C)	Operating Condition
< -40	do not attempt to operate unit		
-40 to 0	de-ice unit prior to start-up	≤ 0	unit will not power up; heater on
		> 0	unit will power up; internal convection on
0 to +55	none	≥ 10	heater off
		≥ 55	backlight reduces
+55 to +70	provide forced air cooling (e.g. fan)		
> +70	do not attempt to operate unit	≥ 75	unit will not power up

Copyright. All Rights Reserved. Laserdyne Pty Ltd

4 OUTLINE DRAWING

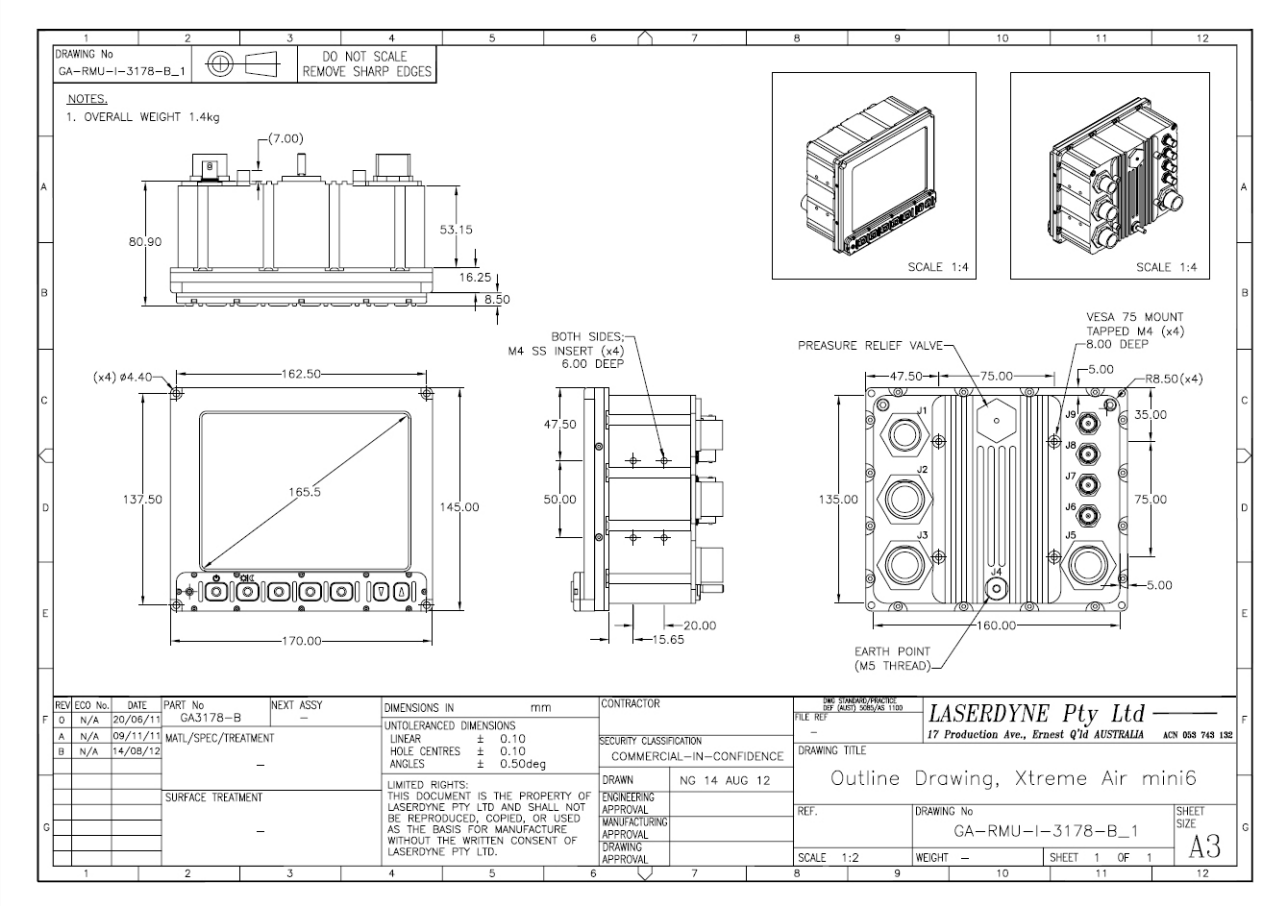

Figure 4-1: Outline Drawing

A Division of Laserdyne Pty Ltd
A.C.N. 053 743 132

P.O. Box 6541
GCMC Bundall
Queensland 9726
Australia

17 Production Ave
Molendinar
Queensland 4214
Australia

Tel: (07) 5594 9772
Fax: (07) 5594 9981

Int'l Tel: 61 7 5594 9772
Int'l Fax: 61 7 5594 9981

email: laserdyne@laserdyne.com.au
website: www.laserdyne.com.au

The information contained herein is proprietary to Laserdyne Pty Ltd. No part of this work may be reproduced or copied in any way without prior written permission of Laserdyne Pty Ltd.
Note: specifications herein are subject to change without notice.

Copyright. All Rights Reserved. Laserdyne Pty Ltd