Installation Manual and Operating Instructions

MD93 Series
Digital Clock/USB Charger

Mid-Continent Instruments and Avionics

Mid-Continent Instrument Co., Inc.
dba Mid-Continent Instruments and Avionics
9400 E. 34th Street N.
Wichita, KS 67226 USA
PH (316) 630-0101 FX (316) 630-0723

Manual Number 9018205
Revision E, October 30, 2018

FOREWORD

This manual provides information intended for use by persons who, in accordance with current regulatory requirements, are qualified to install this equipment. If further information is required, please contact:

Mid-Continent Instruments and Avionics
Attn: Customer Service Dept.
9400 E. 34th Street N.
Wichita, KS 67226 USA
PH (316) 630-0101
FX (316) 630-0723
www.mcico.com

We welcome your comments concerning this manual. Although every effort has been made to keep it free of errors, some may occur. When reporting a specific problem, please describe it briefly and include the manual part number, the paragraph/figure/table reference and the page number. Send your comments to:

Mid-Continent Instruments and Avionics
Attn: Technical Publications
9400 E. 34th Street N.
Wichita, KS 67226 USA
PH (316) 630-0101
FX (316) 630-0723
ks.customerservice@mcico.com

All products produced by Mid-Continent Instrument Co., Inc., including those identified as Mid-Continent Instruments and Avionics or True Blue Power, are designed and manufactured in Wichita, KS, USA.

© Copyright 2018
Mid-Continent Instrument Co., Inc.

REVISION HISTORY

Revision	Date	Detail
A	07/15/2014	Initial release.
B	09/15/2014	Added Environmental Qualification Statement to Section 6.
C	03/12/2015	Added Qualifications to Section 1.3.
D	03/21/2016	Updates for MOD 1 function enhancements. Revised elapsed timer to include countdown timer function. Timer reset function operates only when timer is stopped.
E	10/30/2018	Added internal coin cell battery attributes to Section 1.5. Added electrical specifications for -2 unit.

TABLE OF CONTENTS

SECTION 1 GENERAL DESCRIPTION 6
1.1 INTRODUCTION 6
1.2 PHYSICAL ATTRIBUTES 6
1.3 QUALIFICATIONS 7
1.4 UNIT ARCHITECTURE 7
1.5 TECHNICAL SPECIFICATIONS 7
1.5.1 ELECTRICAL ATTRIBUTES 7
1.5.2 INTERNAL BATTERY ATTRIBUTES 7
1.5.3 PHYSICAL ATTRIBUTES 8

SECTION 2 PRE-INSTALLATION 9
2.1 COOLING 9
2.2 EQUIPMENT LOCATION 9
2.3 ROUTING OF CABLES 9
2.4 LIMITATIONS 9

SECTION 3 INSTALLATION 10
3.1 GENERAL 10
3.2 PRE-INSTALLATION INSPECTION 10
3.3 PARTS 10
3.3.1 INCLUDED PARTS 10
3.3.2 OPTIONAL AVAILABLE PARTS 10
3.3.3 INSTALLER SUPPLIED PARTS 10
3.4 CABLE HARNESS 11
3.4.1 WIRE GAUGE SELECTION 11
3.4.2 PIN ASSIGNMENT INFORMATION 11
3.4.3 HARNESS VERIFICATION 11
3.5 INSTALLATION 12
3.5.1 DIMMING FUNCTIONS 12

SECTION 4 USB CHARGER OPERATION 13
4.1 DESCRIPTION 13
4.2 OPERATIONAL MODES 13
4.3 PROTECTIVE FEATURES 13
4.3.1 SHORT CIRCUIT PROTECTION 13
4.3.2 OVER-CURRENT PROTECTION 13
4.3.3 LOW INPUT VOLTAGE SHUTDOWN 13
4.3.4 OVER-TEMPERATURE 13

SECTION 5 CLOCK / CHRONOMETER OPERATION 14
5.1 DESCRIPTION 14
5.2 CONSTRUCTION 14
5.3 OPERATIONAL MODES 14
5.3.1 LOCAL TIME OPERATION / SETTING 15
5.3.2 UNIVERSAL TIME OPERATION / SETTING 16
5.3.3 FLIGHT TIMER 17
5.3.4 TIMER 18
5.3.4.1 ELAPSED TIMER 18
5.3.4.2 COUNTDOWN TIMER 18
5.3.5 DISPLAY TEST MODE 19

SECTION 6 CONFORMANCE **20**
6.1 INSTRUCTIONS FOR CONTINUED AIR WORTHINESS 20
6.2 ENVIRONMENTAL QUALIFICATION STATEMENT 20

SECTION 1 GENERAL DESCRIPTION

1.1 INTRODUCTION

The MD93 series, part number 6420093-( ) is a digital clock / chronometer with a Dedicated Charging Port (DCP) for USB devices (specifically 2 USB charging ports) fitting into a standard 2 ¼" avionics panel cutout. Power is drawn from the aircraft main bus to light a white, six digit, and seven segment LED clock. The clock can display several different modes: local time, universal time, flight timer, elapsed and countdown timer functions. The MD93 LEDs are daylight readable and can be dimmed during reduced light conditions by external voltage stimulus. When the external voltage is not present the clock LED and annunciations are dimmed by means of an internal photocell. The MD93 clock has an internal battery to maintain clock and flight timer functions when the aircraft is not in use.

The Dual USB Charging Port is designed as a DCP (Dedicated Charging Port) to industry-standard protocol per the *USB Battery Charging 1.2 Compliance Plan*. Early-generation or smaller consumer electronics typically accept one (1.0) amp during charging. However, newer electronics, such as tablets and larger devices can accept, and in some cases, require up to 3 amps to charge and operate. As a high power DCP, the MD93 can provide up to 2.1 amps (p/n 6420043-1) or 3 amps (p/n 6420043-2) to charge any USB device, including the higher demand products. Unlike most dual USB chargers which provide one (1.0) amp on one port and 2.1 amps on the second port, the MD93 can provide 2.1 amps (on -1 unit) or 3 amps (on -2 unit) to both ports simultaneously. With features like short circuit protection, over-current protection, low voltage shut-down and temperature monitoring, it can handle abnormal conditions safely.

1.2 PHYSICAL ATTRIBUTES

The cutout is a single, integrated component contained in a metal enclosure, fitting into a standard 2 ¼" avionics instrument panel cutout. A 4-pin connector on the rear of the unit is used for power input, external dimming control and flight timer operation. The front of the unit houses dual, USB Standard-A receptacles. Three buttons on the front of the unit are used for changing modes of operation between clocks and timers as well as setting/resetting clocks and timers. Refer to Figure 1 below for unit dimensions.

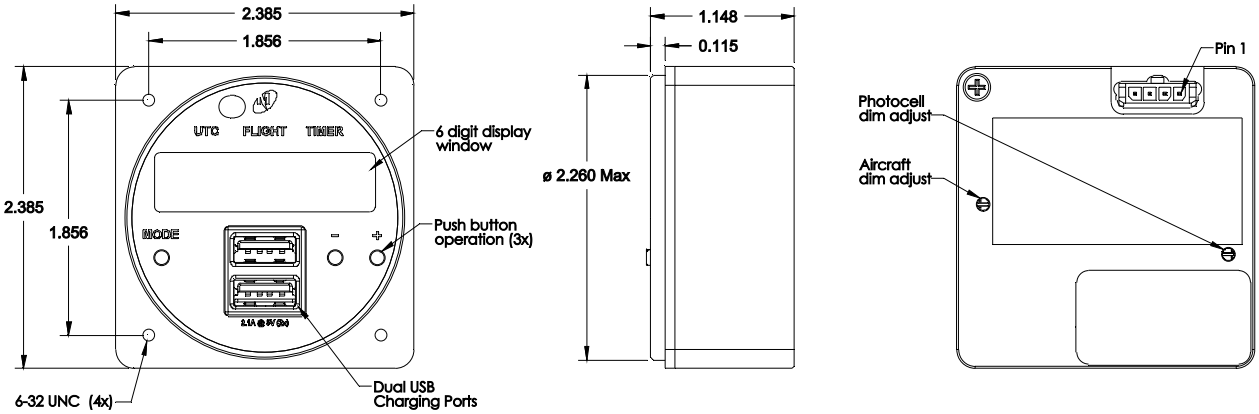

Figure 1
MD93 Outline Drawing

1.3 QUALIFICATIONS

Certification:	FAA TSO-C71 EASA ETSO-C71
Environmental Qualification:	RTCA DO-160G Environmental Category F1S2BB[(RCC1)(UG)]XXXXXXY[B(XX)]BRXXMXXXAX

Table 1
Qualifications

1.4 UNIT ARCHITECTURE

The unit is comprised of two primary building blocks, a USB charger and digital clock. 10-32 VDC input power is regulated, 5 VDC via DC-DC converter used to power the USB charger and all clock/chronometer functions. A charging port controller manages power output for the dual USB charger port. An internal battery maintains clock functions when aircraft power is removed.

1.5 TECHNICAL SPECIFICATIONS

1.5.1 Electrical Attributes

Input Voltage:	10 – 32 VDC
Input Power: 6420093-1: 6420093-2:	 29 watts max; 2.1 amps @ 14 VDC / 1 amp @ 28 VDC 36 watts max; 2.6 amps @ 14 VDC / 1.3 amps @ 28 VDC
Output Voltage:	5 VDC ± 0.25 VDC per USB port
Output Power: 6420093-1: 6420093-2:	 2.1 amps max per USB port 3.0 amps max per USB port
Efficiency:	≈ 85% nominal
Clock Accuracy:	Less than ± 15 seconds per month

Table 2
Electrical Attributes

1.5.2 Internal Battery Attributes

Type:	Primary (non-rechargeable) coin cell, poly-carbonmonofluroride lithium
Model:	BR2330
Output Voltage:	3 VDC
Capacity / Energy:	0.255 Ah / 0.765Wh
Certification:	UL 1642 (see section 2.4)

Table 3
Internal Battery Attributes

1.5.3 Physical Attributes

Weight:	0.25 pounds
Dimensions : (not including connector)	2.385 inches wide x 2.385 inches high x 1.15 inches deep
Charging Ports Type:	USB Standard-A
Clock Digits:	0.360” H x 0.138” W
Connector Kit:	MCIA P/N 9018178
Mounting:	Rear Panel Mount

Table 4
Physical Attributes

SECTION 2 PRE-INSTALLATION

2.1 COOLING

The MD93 will become warm when in use; however no external cooling is required. This is normal and within operational parameters. No special mounting considerations are required, although mounting to a metal surface can help dissipate any heat generated and extend the life of the product.

2.2 EQUIPMENT LOCATION

The MD93 Digital Clock / Dual USB Charging Port is designed for a circular rear panel mount configuration, allowing for installation in a cockpit or cabin. Clearance should be provided for the input mating connector which may require an additional inch of clearance beyond the rear of the unit.

2.3 ROUTING OF CABLES

Avoid sharp bends in cabling and routing near aircraft control cables. Avoid close proximity and contact with aircraft structures, avionics equipment or other obstructions that could chafe wires during flight and cause undesirable effects.

2.4 LIMITATIONS

Environmental qualifications were verified per RTCA DO-160, Revision G in lieu of those identified within the minimum performance standards (MPS) of the TSO.

The conditions and tests for TSO approval of this article are minimum performance standards. Those installing this article, on or in a specific type or class of aircraft, must determine that the aircraft installation conditions are within the TSO standards, specification of the article and deviations as listed above. TSO articles must have separate approval for installation in an aircraft. The article may be installed only according to 14 CFR part 43 or the applicable airworthiness requirements.

Note: Per 8300.16 job aid applicable to airplanes certified under Title 14 of the Code of Federal Regulations part 25 (Section H. Alterations or Repairs, Element H.7). (*Approval is required for*) Changes to designs involving lithium batteries or battery systems *except* for the following cases:

1. Very small batteries or battery systems (e.g., button/coin cells) not required for safe operation of the airplane that have less than 2 watt-hours of energy and meet UL 1642,UL 2054 or International Electrotechnical Commission(IEC) 62133.

The battery in the MD93 is non-rechargeable and considered “very small”. It is less than two Watt-hours and is certified to UL 1642. No STC or coordination with the ACO is required.

SECTION 3 INSTALLATION

3.1 GENERAL

This section contains interconnect diagrams, mounting dimensions and other information pertaining to the installation of the MD93 Digital Clock / Dual USB Charging Port. After installation of cabling and before installation of the equipment, ensure that power and ground are applied to the proper pins specified in Section 3.4.2, Pin Assignment Information.

3.2 PRE-INSTALLATION INSPECTION

When unpacking this equipment, make a visual inspection for evidence of any damage that may have occurred during shipment.

3.3 PARTS

3.3.1 Included Parts

The following parts are included:

- Digital Clock / Dual USB Charging Port MCIA P/N 6420093-( )
- Installation Manual MCIA P/N 9018205
- Installation Kit MCIA P/N 9018178
    - Mating Connector, 4-pin
    - Pins (6) (4 required, 2 spares)
    - Screws (5), #6-32 x 3/8” Flat Head (4 required, 1 spare)

3.3.2 Optional Available Parts

No additional parts or components are available.

3.3.3 Installer Supplied Parts

- Cable Harness Wire, See Section 3.4.1 for specifications
- Circuit Breaker Recommendation, 3 amps (1.5 amp may be sufficient for 28V aircraft) (as needed per system requirements)

3.4 CABLE HARNESS

Construct the cable harness following the instructions outlined below and per Tables 4 and 5. Refer to Section 2: Pre-Installation Considerations for routing precautions.

3.4.1 Wire Gauge Selection

Use of PTFE, ETFE, TFE, Teflon or Tefzel insulated wire is recommended for aircraft use. The wire harness should utilize 20-24 AWG stranded wire. Refer to Table 4 below for suggested minimum wire size.

Wire Gauge	Wire Length
20 AWG stranded wire	>35 ft.
22 AWG stranded wire	>14 ft.
24 AWG stranded wire	<14 ft.

Table 4
Wire Gauge and Length

Note: Pins should be crimped using Molex Hand Crimp Tool 63819-0000 (preferred), 63811-2800 (obsolete) or 11-01-0200 (obsolete). See the Molex Hand Crimp Tool User Manual for crimp procedures.

3.4.2 Pin Assignment Information

See Table 5 for pinout definition and Figure 2 for pin locations.

Pin Number	Signal
1	Aircraft Power
2	Ground
3	Aircraft Lighting Bus
4	Flight Timer Input

Table 5
Power Input Connector Pinout

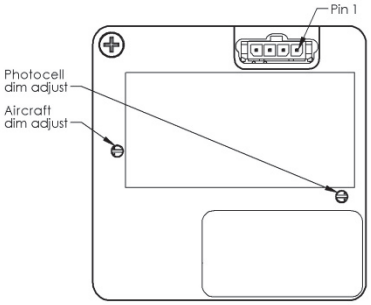

Figure 2
MD93 Rear View

3.4.3 Harness Verification

***** WARNING *****

Failure to install aircraft power and ground wires in the proper mating connector locations could damage the unit.

Once the cable harness is prepared, prior to connecting the MD93, activate the aircraft power bus and use a multimeter to verify that aircraft power and ground are supplied with appropriate voltage on the proper pins within the mating harness.

The MD93 must not be installed with input terminals reversed as this could damage the unit. Verify the correct polarity of any harness or equipment prior to connecting to the MD93.

3.5 INSTALLATION

The MD93 is rear mounted using a standard 2 ¼" panel cutout. Prepare the panel cutout as shown in Figure 3 below. Prior to installing the unit, the display dimming should be adjusted according to section 3.5.1, Dimming Functions. Mount the MD93 with #6-32 flat head screws (provided with installation kit).

NOTE: The maximum screw length used to mount the unit is 9/32" (0.280") + panel thickness.

***** WARNING *****

Using screws longer than the recommended maximum length may damage the MD93 unit!

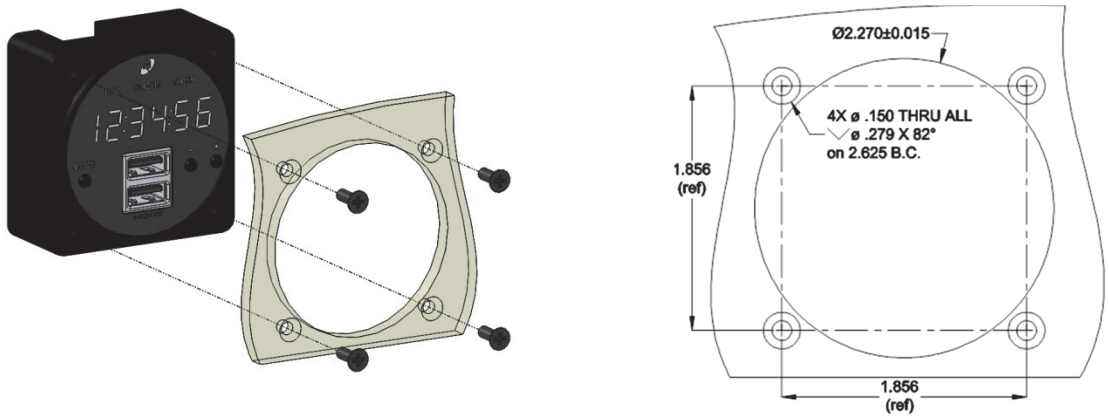

Figure 3
Rear Panel Mount Installation

3.5.1 Dimming Functions

The MD93 will accept a power input from the aircraft bus between 10 to 32 volts on pin 1. The unit brightness can be manually controlled by supplying a lighting input voltage on pin 3. The lighting input voltage will be compared to the power input and will control the lighting when it is between 10-100% of the power input. A voltage equal to the aircraft bus voltage (100%) corresponds to maximum brightness. If the lighting voltage is less than 10% of the power input voltage, dimming will be automatically controlled by the ambient light sensed by the photocell built into the unit.

To adjust the brightness range of the clock for optimal daytime and night-time viewing, as well as balance amongst other panel instruments, use the two adjustments on the rear of the unit as shown in Figure 2. Set the input voltage/lighting bus to maximum and turn the "Aircraft dim adjust" screw to raise or lower the brightness. Next, turn the input voltage/lighting bus off in dark conditions and turn the "Photocell dim adjust" screw to raise or lower the brightness.

NOTE: the adjustment screw has a single 360° range of rotation. Exceeding its limits past the stops will damage the unit.

> The brightness of the unit can be automatically controlled based on ambient light conditions using the internal photocell at all times simply by not installing the lighting input voltage on pin 3. To adjust the desired brightness range, follow the "Photocell dim adjust" method in the previous paragraph in dark conditions.

SECTION 4 USB CHARGER OPERATION

4.1 DESCRIPTION

The MD93 Dual USB Charging Port converts aircraft DC input voltage within the range specified to a 5V DC output. This output power is applied to a dual USB-A connector in accordance with the *USB Implementers Forum*'s *Dedicated Charging Port Compliance Plan.*

4.2 OPERATIONAL MODES

The USB D+ and D- data lines communicate with the USB portable device to tell the device it is a dedicated charging port (DCP), capable of a higher current than a standard USB port. Each USB port on the MD93 can provide up to 2.1 amps (6420093-1) or 3.0 amps (6420093-2) simultaneously at 5 VDC.

4.3 PROTECTIVE FEATURES

4.3.1 Short Circuit Protection

The MD93 is capable of surviving a short circuit event without permanent damage. The unit enters an over-current condition so that the average current is significantly reduced and the device is protected.

4.3.2 Over-Current Protection

The MD93 monitors current draw individually on each port. During an over-current condition the output is turned off until the over-current condition is removed. Once the overcurrent condition is removed, the unit returns to normal operation.

4.3.3 Low Input Voltage Shutdown

If the input voltage applied to the MD93 drops below 10 VDC the unit will shut down until the applied voltage returns to a level within operating range.

4.3.4 Over-Temperature

If the temperature of the MD93 becomes elevated, the unit communicates with the USB portable device to reduce the charge current output to a 1.0 amp limit. When temperature returns to an acceptable level the unit automatically returns to a higher charge current as required (up to 2.1 amps on 6420093-1; up to 3.0 amps on 6420093-2).

SECTION 5 CLOCK / CHRONOMETER OPERATION

5.1 DESCRIPTION

The clock/chronometer portion of the MD93 has four modes of operation, including local time, universal time, flight timer, elapsed and countdown timers. Specific operation instructions are covered in Section 5.3 (Operational Modes).

5.2 CONSTRUCTION

The clock has six digits that are 0.360" tall and 0.138" wide. Three user interface buttons (**MODE**, **– ,** and **+**) are utilized to switch between modes of operation, set clock time, and manage timer functions for the MD93. Backlit annunciations on the front bezel are included which indicate current mode of operation. When aircraft power is removed, the display clock and all annunciations will be turned off. The MD93 contains a battery that maintains clock functions (local time, universal time, flight timer) when aircraft power is removed for well over ten years.

5.3 OPERATIONAL MODES

The MD93 modes of operation for clock functions are, in order: local time, universal time, flight timer, countdown and elapsed timer. Note: When the clock is in local time function, there are no annunciations to indicate as this is the default mode of operation. The mode button (MODE) is used to alternate between four different operational modes; specifically, local time > universal time > flight timer > timer (elapsed and countdown) > (and back to) local time, etc. This is performed by pressing the MODE button. Refer to Figure 4 - Modes of Operation for changing modes of operation.

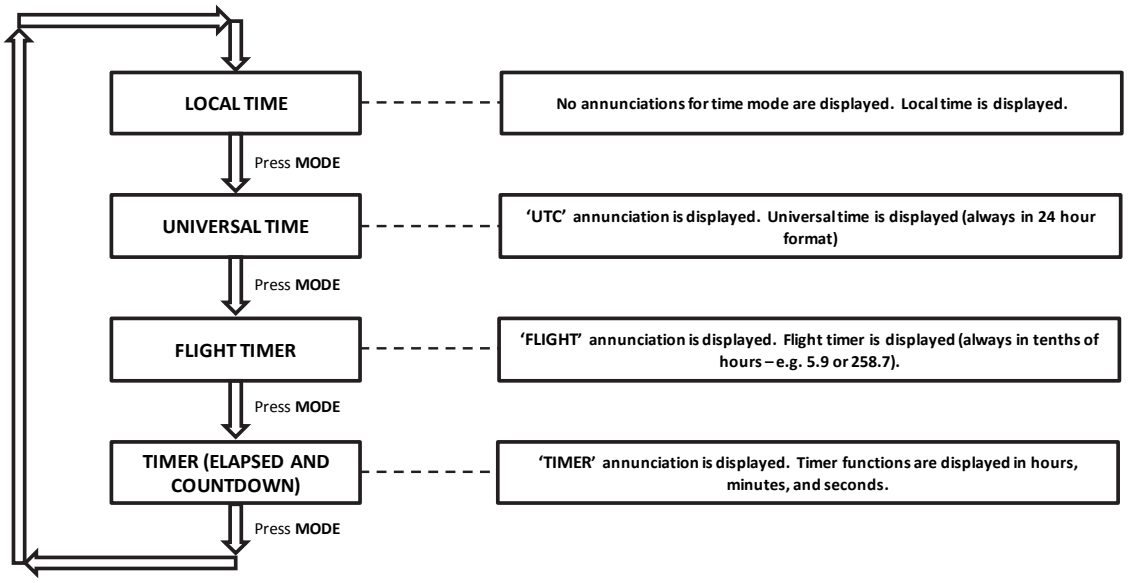

Figure 4
Modes of Operation

5.3.1 Local Time Operation / Setting

When power is applied to the MD93, the system defaults to local time mode (there is no indication or annunciation showing “LOCAL” time). To set time and preferences (e.g. 12/24 hour, display or hide seconds) refer to Figure 6. Note: As minutes and seconds can also be set in universal time mode, it is not necessary to set minutes or seconds when setting local time (refer to universal time operation/setting). However, if minutes and/or seconds are set for local time, the system will update the minutes and seconds in universal time as well.

Figure 5
Local Time Clock Mode

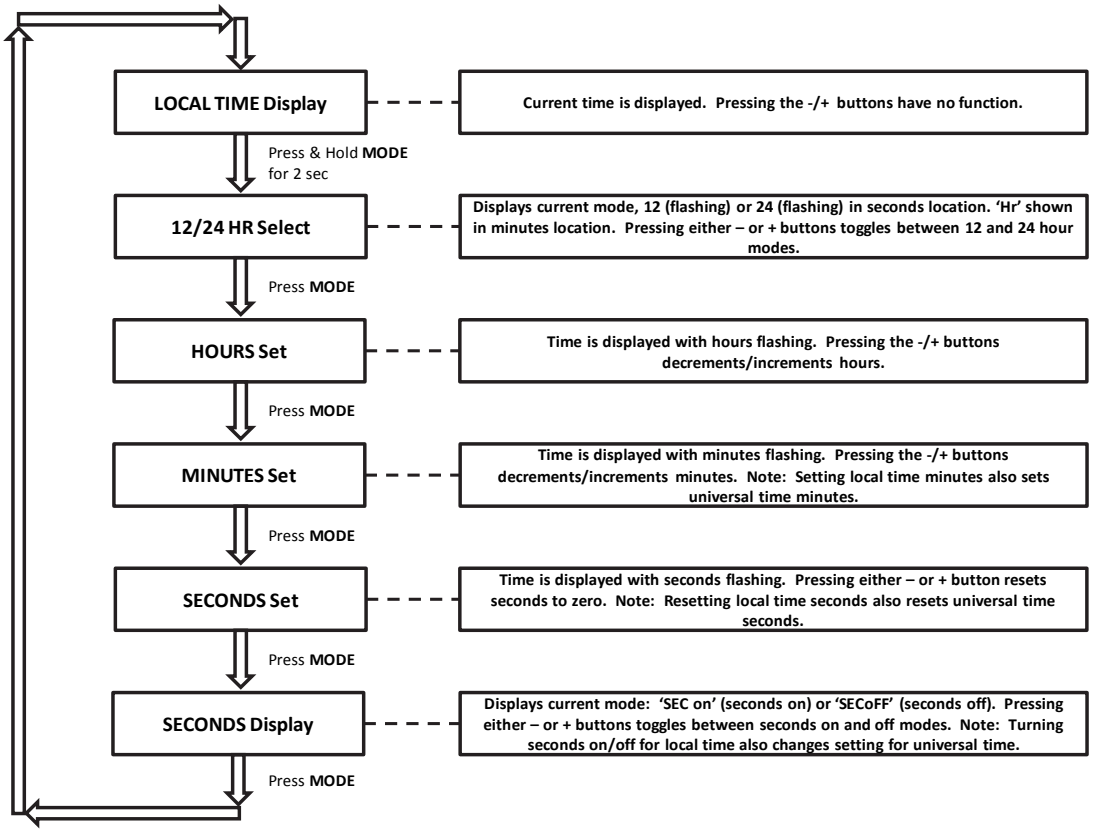

Figure 6
Setting / Configuring Local Time

5.3.2 Universal Time Operation / Setting

When operational mode is changed to universal time, UTC will be backlit (refer to Figure 7). To set UTC time, refer to Figure 8 - Setting Universal Time. Setting minutes and seconds in UTC time also sets minutes and seconds for local time.

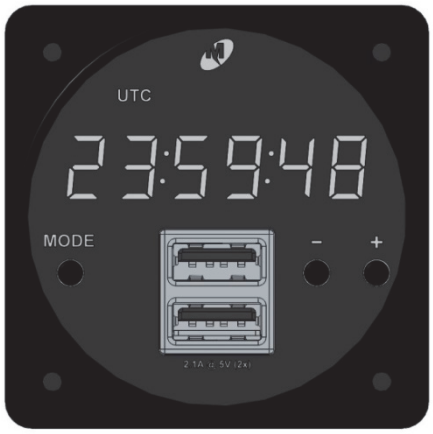

Figure 7
Universal Time Clock Mode

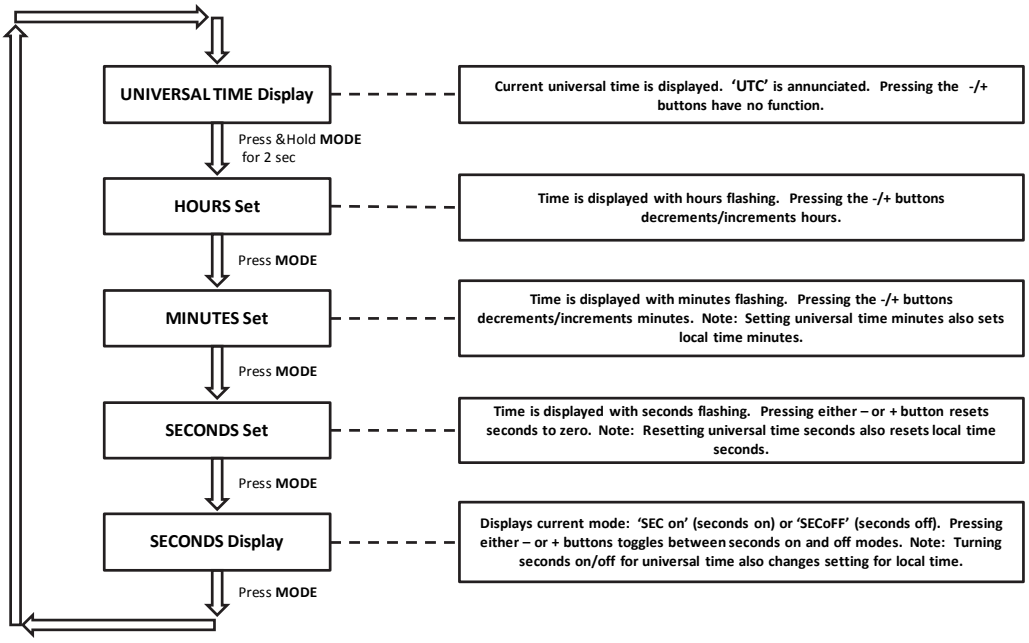

Figure 8
Setting Universal Time

5.3.3 Flight Timer

When operational mode is changed to flight timer, FLIGHT will be backlit (refer to Figure 9). In order for the flight timer to be active, a ground or aircraft power signal must be supplied to pin 4 of the connector. This can be provided from an event-based relay (such as engine start or weight-on-wheels). Or it can simply be connected via jumper to the power or ground pins of the unit to activate on unit power. The decimal point will blink briefly every 2 seconds to indicate that the flight timer is active. Flight time is displayed in hours and tenths of hours up to 99999.9 hours. The flight timer maintains the accumulated time (but does not run) when power is off.

Two flight timers are enabled on the MD93. The default flight timer shown (normally in FLIGHT mode) is a resettable timer. Pressing and holding either **–** or **+** button will display the non-resettable flight timer. Upon releasing the **–** or **+** button, the resettable flight timer will be displayed. Note: the non-resettable timer value may be initially set in diagnostic mode. Contact Mid-Continent Instruments and Avionics for further details if required. For more detailed operation of flight timer, refer to Figure 10 below.

Figure 9
Flight Timer Mode

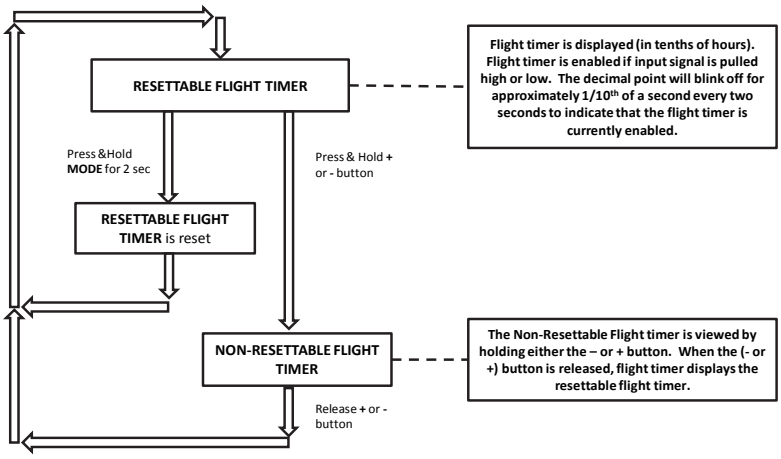

Figure 10
Flight Timer Operation

5.3.4 Timer

When operational mode is changed to the timer function, TIMER will be backlit (refer to Figure 11). The timer function can be operated as either an elapsed timer (stopwatch) or countdown timer, where a specific countdown time can be set. Upon power up, the MD93 remembers countdown timer setting and, when in timer mode, will default to the last mode (elapsed or countdown).

5.3.4.1 Elapsed Timer

The elapsed timer counts up to a maximum of 99 hours, 59 minutes, 59 seconds and then starts again at zero time. Pressing the **+** button will start and stop the timer. Pressing the **–** button resets the timer only if the timer is stopped. Note: If the timer is active, the user can change modes (e.g. to local time) and timer will still remain active, but only when power is maintained to the clock. For detailed timer operation, refer to Figure 12.

5.3.4.2 Countdown Timer

The countdown timer can be set to a maximum of 99 hours, 59 minutes, 59 seconds. Pressing the **+** button will start and stop the timer. Pressing the **–** button resets the timer only if the timer is stopped. When the countdown timer reaches 00:00:00, it will begin counting up and will flash every second to indicate elapsed time after countdown reached zero. Note: If the timer is active, the user can change modes (e.g. to local time) and timer will still remain active, but only when power is maintained to the clock. Countdown timer setting is maintained when clock is powered off. For detailed timer operation and setting, refer to Figure 12.

Figure 11
Timer Mode

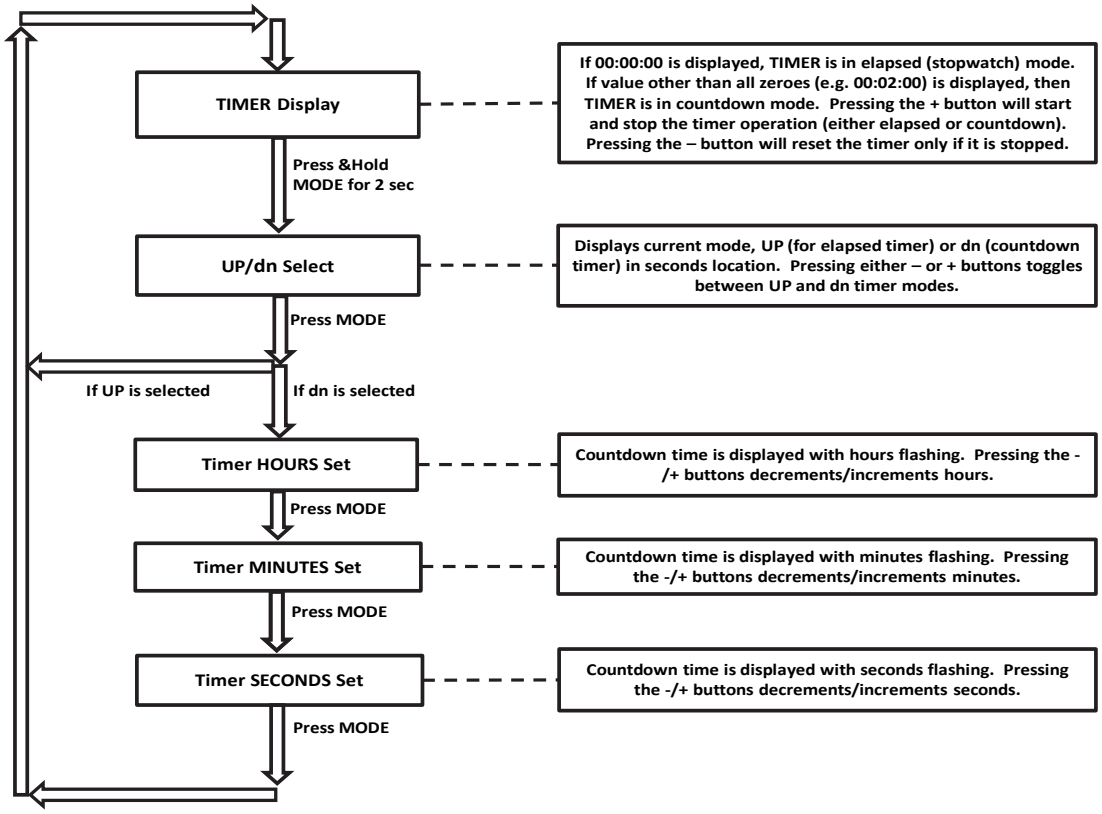

Figure 12
Elapsed Timer Operation

5.3.5 Display Test Mode

To test the MD93 display, press and hold both +/- buttons for 2 seconds. After 2 seconds all clock digits shall display 8's (e.g. 88:88:8.8) and all annunciators shall be activated until the +/- buttons are released. Refer to Figure 13 below.

Figure 13
Display Test Mode

SECTION 6 CONFORMANCE

6.1 INSTRUCTIONS FOR CONTINUED AIRWORTHINESS

No periodic scheduled maintenance or calibration is necessary for continued airworthiness of the MD93 Digital Clock / Dual USB Charging Port. If the unit fails to perform to specifications, the unit must be removed and serviced by Mid-Continent Instruments and Avionics or their authorized designee.

6.2 ENVIRONMENTAL QUALIFICATION STATEMENT

MODEL NUMBER: MD93 Series **PART NUMBER:** 6420093-()
NOMENCLATURE: Digital Clock/USB Charging Port

MANUFACTURER: Mid-Continent Instrument Co., Inc.
ADDRESS: 9400 E. 34th St. North, Wichita, KS 67226, USA.
MANUFACTURERS SPECIFICATIONS:
Minimum Performance Specifications: TS509 6430102-(), TDS509 6430102-(), TDS093 6420093-( )
Qualification Test Reports: QTR1901-1902, QTR1904-1908-1 & 1908-2, QTR1915-1917

RTCA DO-160: Rev G, dtd 12/08/10 **DATES TESTED:** 7/2014-9/2014

CONDITIONS	SECTION	DESCRIPTION OF TEST
Temperature and Altitude Low Temperature High Temperature Altitude	4 4.5.1 4.5.2 4.6.1	Category F1 Short and Normal Operating Low Temp = -40C Short Time Operating High Temp = +70C Normal Operating High Temp = +55C Altitude = 55,000 ft
Temperature Variation	5	Category S2
Humidity	6	Category B
Operational Shock and Crash Safety	7	Category B
Vibration	8	Category R; Curves C, C1 Category U, Curve G
Explosion	9	Category X
Waterproofness	10	Category X
Fluids	11	Category X
Sand and Dust	12	Category X
Fungus	13	Category X
Salt Spray	14	Category X
Magnetic Effect	15	Category Y
Power Input	16	Category B(XX)
Voltage Spike	17	Category B
Audio Frequency Conducted Susceptibility	18	Category R
Induced Signal Susceptibility	19	Category X
Radio Frequency Susceptibility	20	Category X
Emission of Radio Freq Energy	21	Category M
Lightning Induced Transient Susceptibility	22	Category X
Lightning Direct Effects	23	Category X
Icing	24	Category X
ESD	25	Category A
Fire, Flammability	26	Category X
REMARKS: Section 4: Category F1 Operating Low temperature performed at Short-time Low temperature set point of -40C. Section 8: Vibration was performed per Cat R, Curves C & C1 for fixed-wing aircraft and per Cat U, Curve G for helicopter using the same test article.		