REVISIONS				
REV. SYM.	E.C.O. NUMBER	DESCRIPTION	BY DATE	APP'D DATE
9		REMOVED MAX DIMS	ENF 4/2012	RRR 4/2012

UNCONTROLLED DOCUMENT WILL NOT BE UPDATED

NOTES:

1. THE GMT232 (M22520/37-01) CRIMP TOOL IS DESIGNED TO TERMINATE WIRE SPLICE CONFORMING TO MIL-S-81824 OF THE FOLLOWING SIZES:

TOOL CAVITY	12-16		16-20		20-26	
CRIMP SPLICE SIZE	I.D.	O.D.	I.D.	O.D.	I.D.	O.D.
	.102	.153	.069	.106	.050	.080
	.097	.147	.064	.101	.045	.075

2. A PROPERLY CALIBRATED GMT232 (M22520/37-01) CRIMP TOOL HAS THE FOLLOWING CHARACTERISTICS:

   A. RATCHET ADJUSTMENT (SET AT THE FACTORY): A COMPRESSION FORCE 40 POUNDS MIN. APPLIED 1.50±.12 INCHES FROM THE END OF THE HANDLES SHALL BE REQUIRED TO COMPLETELY CLOSE JAWS BEFORE THE RATCHET MECHANISM RELEASES THE HANDLES.

   B. JAW CLOSING: WITH THE JAWS FULLY CLOSED, A "GO" GAGE SHALL FIT IN THE SPACE BETWEEN THE INDENTER AND ITS CORRESPONDING CAVITY. A "NO-GO" GAGE SHALL NOT FIT IN THIS SPACE. GAGE SIZES ARE AS FOLLOWS:

TOOL CAVITY	"GO" DIA.	"NO-GO" DIA.
12-16	.062	.072
16-20	.042	.052
20-26	.025	.035

THE DANIELS G411 (M22520/39-01) CRIMP TOOL GAGE IS RECOMMENDED FOR THIS PURPOSE.

3. RATCHET IS SECURED TO PREVENT UNAUTHORIZED ADJUSTMENT.
4. TOOL IS NOT EQUIPPED WITH AN EARLY RELEASE MECHANISM.

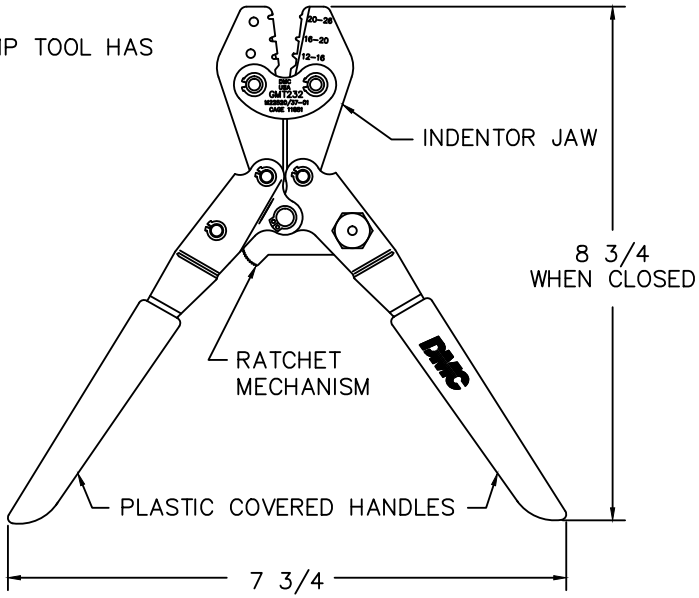

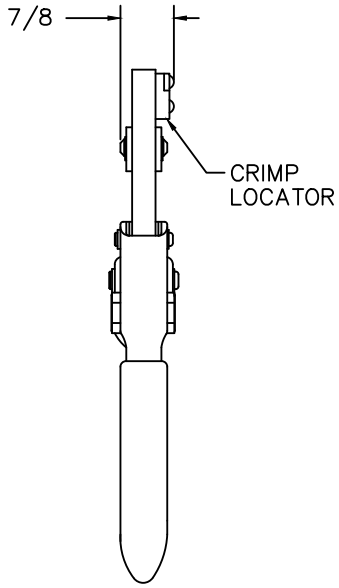

RESTRICTED & CONFIDENTIAL
CONFIDENTIAL PROPERTY OF DANIELS MANUFACTURING CORP. NOT TO BE DISCLOSED TO OTHERS, REPRODUCED OR USED FOR ANY OTHER PURPOSE, EXCEPT AS AUTHORIZED IN WRITING BY DANIELS MANUFACTURING. MUST BE RETURNED TO DANIELS MANUFACTURING CORP. ON COMPLETION OF ORDER OR OTHER PURPOSE FOR WHICH LENT.

DO NOT SCALE DRAWING

MATERIAL
HEAT TREAT
FINISH

ITEM	PART NO.	QTY.	DESCRIPTION/REMARKS

DRN. DUNG CAO DATE 9-25-95
CHK'D. DE DATE 9-95
APP'D. DATE
APP'D. DATE

NOTE: THIS DRAWING IS AN OUTLINE DRAWING OF THE RESPECTIVE DMC PART NUMBER INDICATED. ACTUAL DMC PART NUMBER IS DRAWING NUMBER WITHOUT THE "-ENV" SUFFIX.

DMC DANIELS MANUFACTURING CORP. ORLANDO, FLORIDA CAGE 11851

TITLE CRIMP TOOL ENVELOPE DRAWING M22520/37-01

WHERE USED:

SIZE	SCALE	CAD P/N	SHEET	OF
B	NTS	GMT232-ENV	1	1

POSTING | DWG. NO. GMT232-ENV | REV. 9